The Riverside

Hot Dog Cart

DreamMaker HOT DOG CARTS

Home of the Ez-Lease - Call Today! **1.800.408.1802**

Rear View

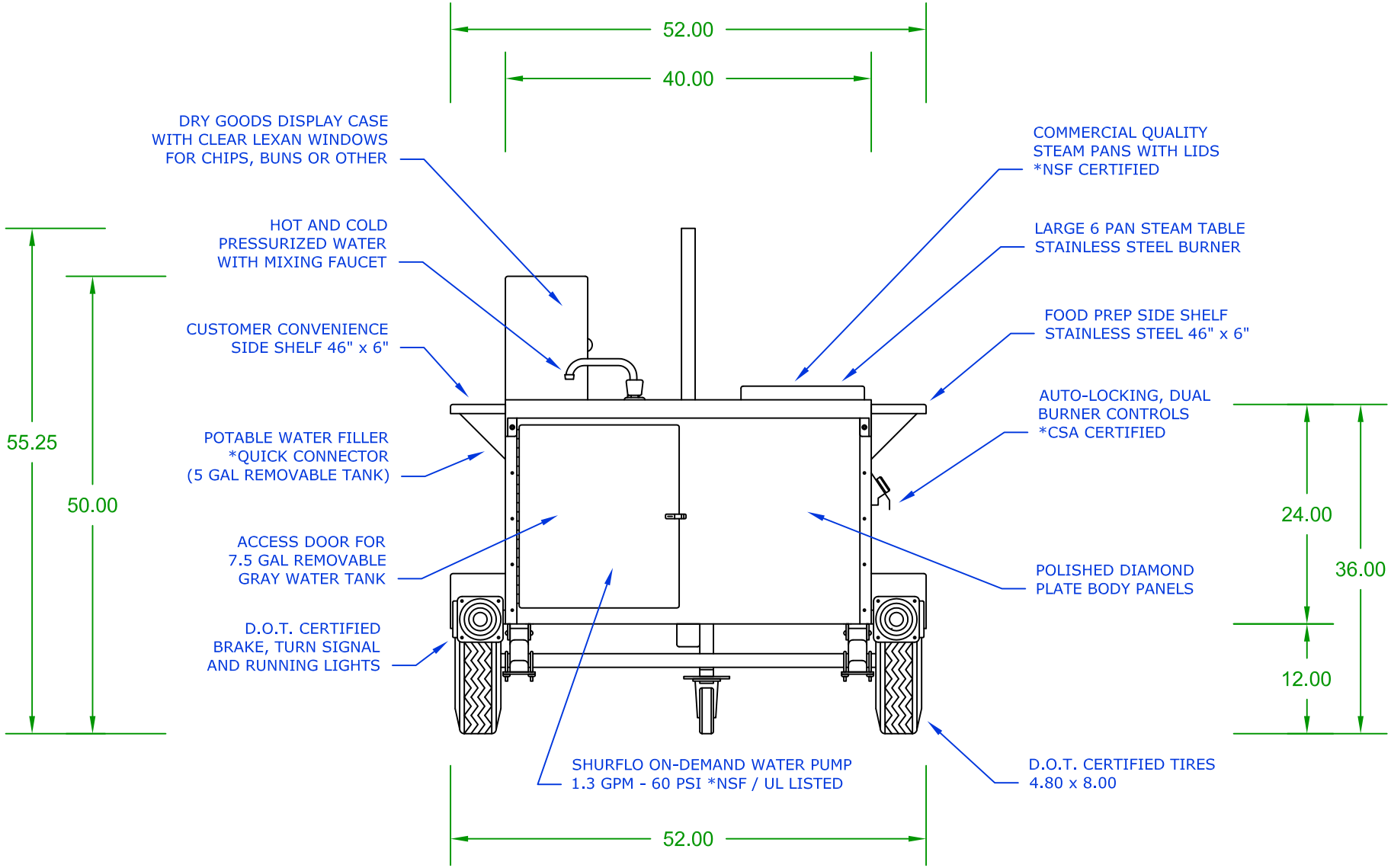

DreamMakerHotDogCarts.com

Specifications subject to change without notice.
Call to verify critical specifications if required.